Summary of Product Characteristics

1 NAME OF THE MEDICINAL PRODUCT

GalliaPharm 0.74 – 1.85 GBq radionuclide generator

2 QUALITATIVE AND QUANTITATIVE COMPOSITION

The radionuclide generator contains germanium (^{68}Ge) as mother nuclide which decays to the daughter nuclide gallium (^{68}Ga). The germanium (^{68}Ge) used for the production of the (^{68}Ge/^{68}Ga) generator is carrier-free. The total radioactivity due to germanium (^{68}Ge) and gamma-ray-emitting impurities is not more than 0.001%.
The GalliaPharm 0.74 – 1.85 GBq radionuclide generator is a system for the elution of gallium (^{68}Ga) chloride solution for radiolabelling in accordance Ph. Eur. 2464. This solution is eluted from a column on which the mother nuclide germanium (^{68}Ge), parent of gallium (^{68}Ga), is fixed. The system is shielded. Physical characteristics of both mother and daughter nuclides are summarized in table 1.

Table 1: physical characteristics of germanium (^{68}Ge) and gallium (^{68}Ga)

	Physical characteristics of	
	^{68}Ge	**^{68}Ga**
Half-life	270.95 days	67.71 minutes
Type of physical decay	Electron capture	Positron emission
X-rays	9.225 keV (13.1 %) 9.252 keV (25.7 %) 10.26 keV (1.64 %) 10.264 keV (3.2 %) 10.366 keV (0.03 %)	8.616 keV (1.37 %) 8.639 keV (2.69 %) 9.57 keV (0.55 %)
Gamma-rays		511 keV (178.28 %) 578.55 keV (0.03 %) 805.83 keV (0.09 %) 1077.34 keV (3.22 %) 1260.97 keV (0.09 %) 1883.16 keV (0.14 %)
beta+		Energy max. Energy 352.60 keV 821.71 keV (1.20 %) 836.00 keV 1899.01 keV (87.94 %)
Data derived from nudat (www.nndc.bnl.gov)		

5 ml of the eluate contains a potential maximum of 1850 MBq of ^{68}Ga and 18.5 kBq of ^{68}Ge (0.001 % breakthrough in the eluate). This corresponds to 1.2 ng of gallium and 0.07 ng of germanium.

The quantity of gallium (^{68}Ga) chloride solution for radiolabelling Ph. Eur. that may be eluted from the generator is dependent on the quantity of germanium (^{68}Ge) present, the volume of eluent used (typically 5 ml) and the lapsed time since the previous elution. If mother and daughter nuclides are in equilibrium, more than 60 % of the present gallium (^{68}Ga) can be eluted.

Table 2 summarizes the activity on the generator and the activity obtained by elution at the start of the shelf-life and at the end of the shelf-life.

Table 2: activity on the generator and activity obtained by elution

Strength	Activity inside the generator at the start of shelf-life	Activity inside the generator at the end of shelf-life	Eluted activity at the start of shelf-life*	Eluted activity at the end of shelf-life*
0.74 GBq	0.74 GBq ± 10 %	0.3 GBq ± 10 %	NLT 0.45 GBq	NLT 0.18 GBq
1.11 GBq	1.11 GBq ± 10 %	0.4 GBq ± 10 %	NLT 0.67 GBq	NLT 0.24 GBq
1.48 GBq	1.48 GBq ± 10 %	0.6 GBq ± 10 %	NLT 0.89 GBq	NLT 0.36 GBq
1.85 GBq	1.85 GBq ± 10 %	0.7 GBq ± 10 %	NLT 1.11 GBq	NLT 0.42 GBq

*NLT = not less than * in equilibrium*

More detailed explanations and examples for elutable activities at various time points are given in section 12.

For the full list of excipients, see section 6.1.

3 PHARMACEUTICAL FORM

Radionuclide generator

The generator is presented as a stainless steel case with two handles and an inlet and an outlet port. The solution for elution is attached to the inlet port whereas the eluate can be collected at the outlet port or inserted directly into a synthesis apparatus.

4 CLINICAL PARTICULARS

4.1 Therapeutic Indications

This medicinal product is not intended for direct use in patients.

The eluate from the radionuclide generator (gallium (^{68}Ga) chloride solution) is indicated for *in vitro* labelling of specific carrier molecules developed and approved for radiolabelling with such solution to be used for positron emission tomography (PET) imaging.

4.2 Posology and method of administration

This medicinal product is for use in designated nuclear medicine facilities only, and should only be handled by specialists experienced with *in vitro* radiolabelling.

Posology
The quantity of the eluate gallium (^{68}Ga) chloride solution required for radiolabelling and the quantity of ^{68}Ga-labelled medicinal product that is subsequently administered will depend on the medicinal product that is radiolabelled and its intended use. Refer to the Summary of Product Characteristics/package leaflet of the particular medicinal product to be radiolabelled.

Paediatric population
Please refer to the Summary of Product Characteristics/package leaflet of the ^{68}Ga-labelled medicinal product for more information concerning its paediatric use.

Method of administration
The gallium (^{68}Ga) chloride solution is not intended for direct use in patients but is used for *in vitro* radiolabelling of various carrier molecules. The route of administration of the final medicinal product should be adhered to.

For instructions on extemporary preparation of the medicinal product before administration, see section 12.

4.3 Contraindications

Do not administer gallium (^{68}Ga) chloride solution directly to the patient.

The use of ^{68}Ga-labelled medicinal products is contraindicated in case of hypersensitivity to the active substance or to any of the excipients listed in section 6.1.

For information on contraindications to particular ^{68}Ga-labelled medicinal products prepared by radiolabelling with gallium (^{68}Ga) chloride solution, refer to the Summary of Product Characteristics/package leaflet of the particular medicinal product to be radiolabelled.

4.4 Special warnings and precautions for use

Gallium (^{68}Ga) chloride solution is not to be administered directly to the patient but is used for *in vitro* radiolabelling of various carrier molecules.

Individual benefit/risk justification
For each patient, the radiation exposure must be justifiable by the likely benefit.
The activity administered should in every case be as low as reasonably achievable to obtain the required information.

General warnings
For information concerning special warnings and special precautions for use of ^{68}Ga-labelled medicinal products refer to the Summary of Product Characteristics/package leaflet of the medicinal product to be radiolabelled.

4.5 Interaction with other medicinal products and other forms of interactions

No interaction studies of gallium (^{68}Ga) chloride solution with other medicinal products have been performed, because it is for radiolabelling of medicinal products.

For information concerning interactions associated with the use of ^{68}Ga-labelled medicinal products refer to the Summary of Product Characteristics/package leaflet of the medicinal product to be radiolabelled.

4.6 Fertility, pregnancy and lactation

Women of childbearing potential
When an administration of radioactive medicinal products to a woman of childbearing potential is intended, it is important to determine whether or not she is pregnant. Any woman who has missed a period should be assumed to be pregnant until proven otherwise. If in doubt about her potential pregnancy (if the woman has missed a period, if the period is very irregular etc.), alternative techniques not using ionising radiation (if there are any) should be offered to the patient.

Pregnancy
Radionuclide procedures carried out on pregnant women also involve radiation dose to the foetus. Only essential investigations should therefore be carried out during pregnancy, when the likely benefit far exceeds the risk incurred by the mother and foetus.

Breast-feeding
Before administering a radioactive medicinal product to a mother who is breast-feeding, consideration should be given to whether the investigation could be reasonably delayed until the mother has ceased breast-feeding. If the administration is considered necessary, breast-feeding should be interrupted and the expressed feeds discarded.

Further information concerning the use of a ^{68}Ga-labelled medicinal product in pregnancy and breast-feeding is specified in the Summary of Product Characteristics/package leaflet of the medicinal product to be radiolabelled.

Fertility
Further information concerning the use of a ^{68}Ga-labelled medicinal product concerning fertility is specified in the Summary of Product Characteristics/package leaflet of the medicinal product to be radiolabelled.

4.7 Effects on ability to drive and use machines

Effects on ability to drive and use machines following administration of ^{68}Ga-labelled medicinal products will be specified in the Summary of Product Characteristics/package leaflet of the medicinal product to be radiolabelled.

4.8 Undesirable effects

Possible adverse reactions following the use of a ^{68}Ga-labelled medicinal product will be dependent on the specific medicinal product being used. Such information will be supplied in the Summary of Product Characteristics/package leaflet of the medicinal product to be radiolabelled.

Reporting of suspected adverse reactions
Reporting suspected adverse reactions after authorisation of the medicinal product is important. It allows continued monitoring of the benefit/risk balance of the medicinal product. Healthcare professionals are asked to report any suspected adverse reactions via HPRA Pharmacovigilance, Earlsfort Terrace, IRL - Dublin 2, Tel: +353 1 6764971, Fax: +353 1 6762517, Website: www.hpra.ie, e-mail: medsafety@hpra.ie.

4.9 Overdose

Accidental administration of the eluate consisting of 0.1 mol/l hydrochloric acid may cause local venous irritation and, in case of paravenous injection, tissue necrosis. The catheter or affected area should be irrigated with isotonic saline solution.

No toxic effects are to be expected from the free ^{68}Ga after an inadvertent administration of the eluate. The administered free ^{68}Ga decays almost completely to stable ^{68}Zn within a short time (97 % are decayed in 6 hours). During this time, ^{68}Ga is mainly concentrated in the blood/plasma (bound to transferrin) and in the urine. The patient should be hydrated to increase the excretion of the ^{68}Ga and forced diuresis as well as frequent bladder voiding is recommended.
Human radiation dose may be estimated using the information given in section 11.

5 PHARMACOLOGICAL PROPERTIES

5.1 Pharmacodynamic properties

Pharmacotherapeutic group: Other diagnostic radiopharmaceuticals, ATC code: V09X.

The pharmacodynamic properties of ^{68}Ga-labelled medicinal products prepared by radiolabelling with the generator eluate prior to administration will be dependent on the nature of the medicinal product to be labelled. Refer to the Summary of Product Characteristics/package leaflet of the product to be radiolabelled.

Paediatric population
The European Medicines Agency has waived the obligation to submit the results of studies with GalliaPharm in all subsets of the paediatric population on grounds of lack of significant therapeutic benefit over existing treatments (see section 4.2 for information on paediatric use). This waiver does however not extend to any diagnostic or therapeutic uses of the product when linked to a carrier molecule.

5.2 Pharmacokinetic properties

Gallium (^{68}Ga) chloride solution is not intended for direct use in patients but is used for *in vitro* radiolabelling of various carrier molecules. Therefore, the pharmacokinetic properties of ^{68}Ga-labelled medicinal products will depend on the nature of the medicinal product to be radiolabelled.
Although gallium (^{68}Ga) chloride solution is not intended for direct use in patients, its pharmacokinetic properties were investigated in rats.

5.3 Preclinical safety data

The toxicological properties of ^{68}Ga labelled medicinal products prepared by radiolabelling with gallium (^{68}Ga) chloride solution, prior to administration, will depend on the nature of the medicinal product to be radiolabelled.

5 ml of the GalliaPharm eluate contain a potential maximum of 1850 MBq ^{68}Ga and 18.5 kBq ^{68}Ge (0.001 % breakthrough). This corresponds to 1.2 ng gallium and 0.07 ng germanium.

Toxicological studies have demonstrated that with a single intravenous injection of 20-38 mg Ga/kg in rats or 15-35 mg Ga/kg in rabbits, administered as gallium lactate, no deaths were observed. The dose at which no toxicity occurs after repeated administration has not been determined, but the LD_{50} is 67.5 mg Ga/kg in rats and 80 mg Ga/kg in mice with daily dosing of gallium nitrate for 10 days. This medicinal product is not intended for regular or continuous administration.

A study on the pharmacokinetic properties performed in rats has shown that following intravenous administration in rats, gallium (^{68}Ga) chloride is slowly cleared from the blood with a biological half-life of 188 h in male and 254 h in female rats. This is because free Ga^{3+} behaves in a similar way as Fe^{3+}. However as the biological half-life is much longer than the physical

half-life of ^{68}Ga (67.71 min) at 188 h or 254 h almost all ^{68}Ga has already decayed to inactive ^{68}Zn. For example, in 6 h approx. 97 % of the initial ^{68}Ga has decayed.

^{68}Ga is excreted predominantly into the urine, with some retention in the liver and kidneys. The organs with the highest ^{68}Ga radioactivity, other than blood, plasma and urine, are the liver (1.5% of the injected amount per gram in female rats and 0.8% IA/g in male rats after 60 min) and the lungs, spleen and bone (0.8-1.1% IA/g in female rats and 0.5% IA/g in male rats after 60 min). In female rats, the ^{68}Ga radioactivity in female genital organ, i.e. uterus and ovaries, is comparable to that seen in the lungs (1.1-1.3% IA/g). In male rats, the ^{68}Ga radioactivity in the testes is very low (≤ 2% IA/g at any time).

The radioactivity resulting from ^{68}Ge breakthrough is extremely low in rats, with the highest ^{68}Ge radioactivity seen in the urine and liver (≤ 2x 10^{-4} % of the injected dose per gram, 5 min to 3 h after injection).

Extrapolating from the female and male rat ^{68}Ga data, the estimated effective dose for a 57 kg woman is 0.0483 mSv/MBq and for a 70 kg man 0.0338 mSv/MBq.

No teratogenic effects or major maternal toxicity were seen in hamsters administrated 30 mg Ga or 40 mg Ge per kg intravenously on day 8 of gestation.

The mutagenic or carcinogenic potential has not been investigated for this product.

Overall, effects in non-clinical studies were observed only at exposures considered sufficiently in excess of the maximum human exposure indicating little relevance to clinical use.

6 PHARMACEUTICAL PARTICULARS

6.1 List of excipients

Column matrix: Titanium dioxide
Solution for elution: Sterile ultrapure 0.1 mol/l hydrochloric acid

6.2 Incompatibilities

Radiolabelling of carrier molecules with gallium (^{68}Ga) chloride is very sensitive to the presence of trace metal impurities.

It is important that all glassware, syringe needles etc., used for the preparation of the radiolabelled medicinal product are thoroughly cleaned to ensure freedom from such trace metal impurities. Only syringe needles (for example, non-metallic) with proven resistance to dilute acid should be used to minimise trace metal impurity levels.

It is recommended not to use uncoated chlorobutyl stoppers for the elution vial as they may contain considerable amounts of zinc that is extracted by the acidic eluate.

6.3 Shelf life

Radionuclide generator: 12 months from calibration date.
The calibration date and the expiry date are stated on the label.

Gallium (^{68}Ga) chloride eluate: After elution, immediately use the eluate.

6.4 Special precautions for storage

Radionuclide generator: Do not store above 25 °C.

Storage of radiopharmaceuticals should be in accordance with national regulations on radioactive materials.

6.5 Nature and contents of container

The glass column consists of a borosilicate glass tube (Ph. Eur. type I) and PEEK (Polyetheretherketone) end plugs which are attached to PEEK inlet and outlet lines via HPLC-style fingertight fittings. These lines are connected to two unions that pass through the outer case of the GalliaPharm generator.

The column is contained within the lead shield assembly. The shield assembly is secured in a stainless steel outer box with two handles.

Accessories supplied with the generator:
1. 1 x PP - bag with 250 ml sterile ultrapure 0.1 mol/l hydrochloric acid (PP = Polypropylene)
2. 1 x Vented spike (ABS = Acrylonitrile Butadiene Styrene/PE = Polyethylene)
3. 2 x Adapter 1/16" to male LUER (PEEK)
4. 2 x Tubing 60 cm (PEEK)
5. 1 x Tubing 40 cm (PEEK)
6. 1 x Tubing 20 cm (PEEK)
7. 3 x Fingertight fitting 1/16" 10-32 (PEEK)
8. 1 x Fingertight fitting 1/16" M6 (PEEK)
9. 1 x Stopcock manifold (TPX = Polymethylpentene/HDPE = High Density Polyethylene)
10. 1 x Male LUER union (PP)

Pack sizes:
The radionuclide generators are supplied with the following ^{68}Ge activity amounts at calibration date: 0.74 GBq, 1.11 GBq, 1.48 GBq, 1.85 GBq.

Sectional view of the GalliaPharm radionuclide generator

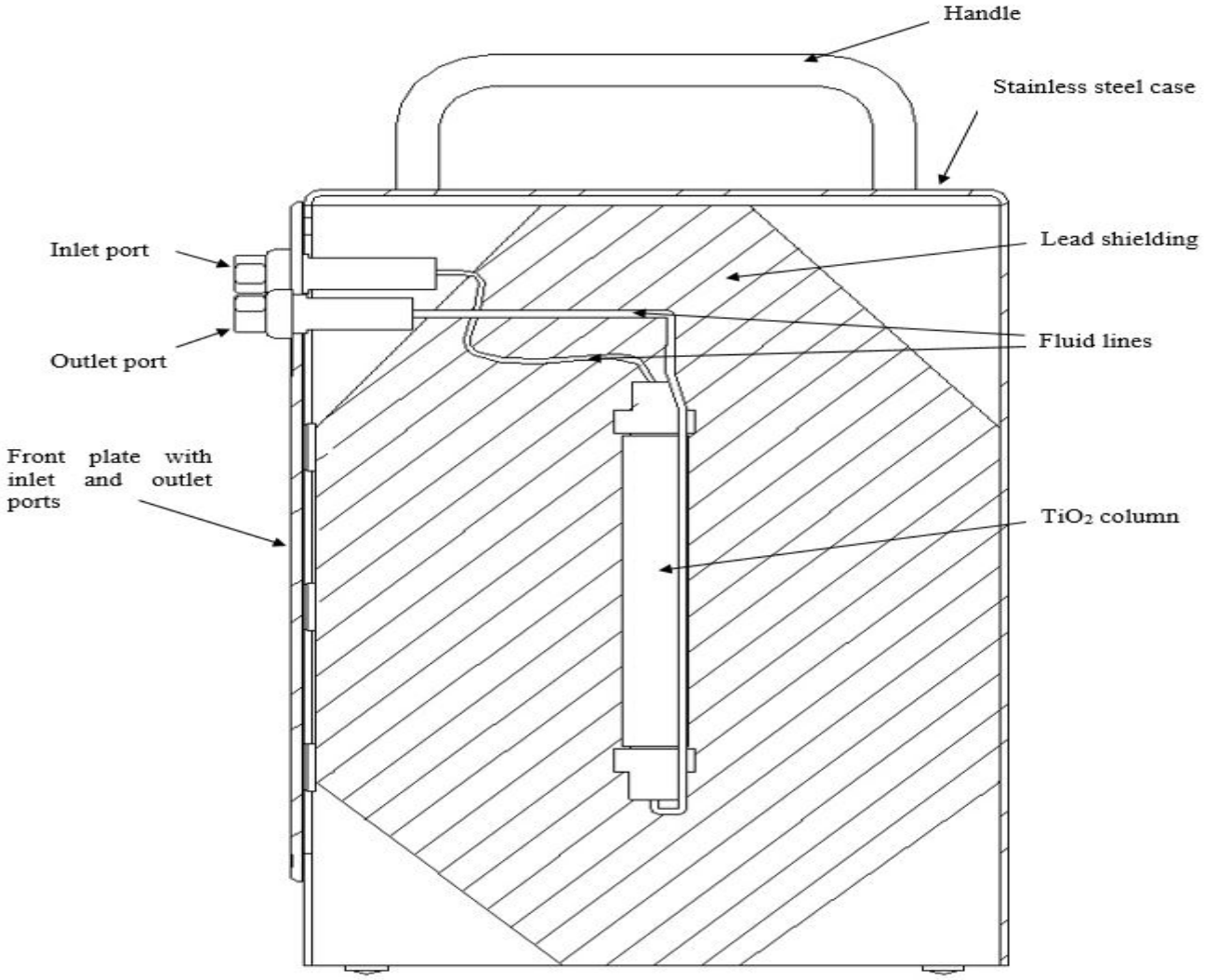

Front view of the GalliaPharm radionuclidegenerator

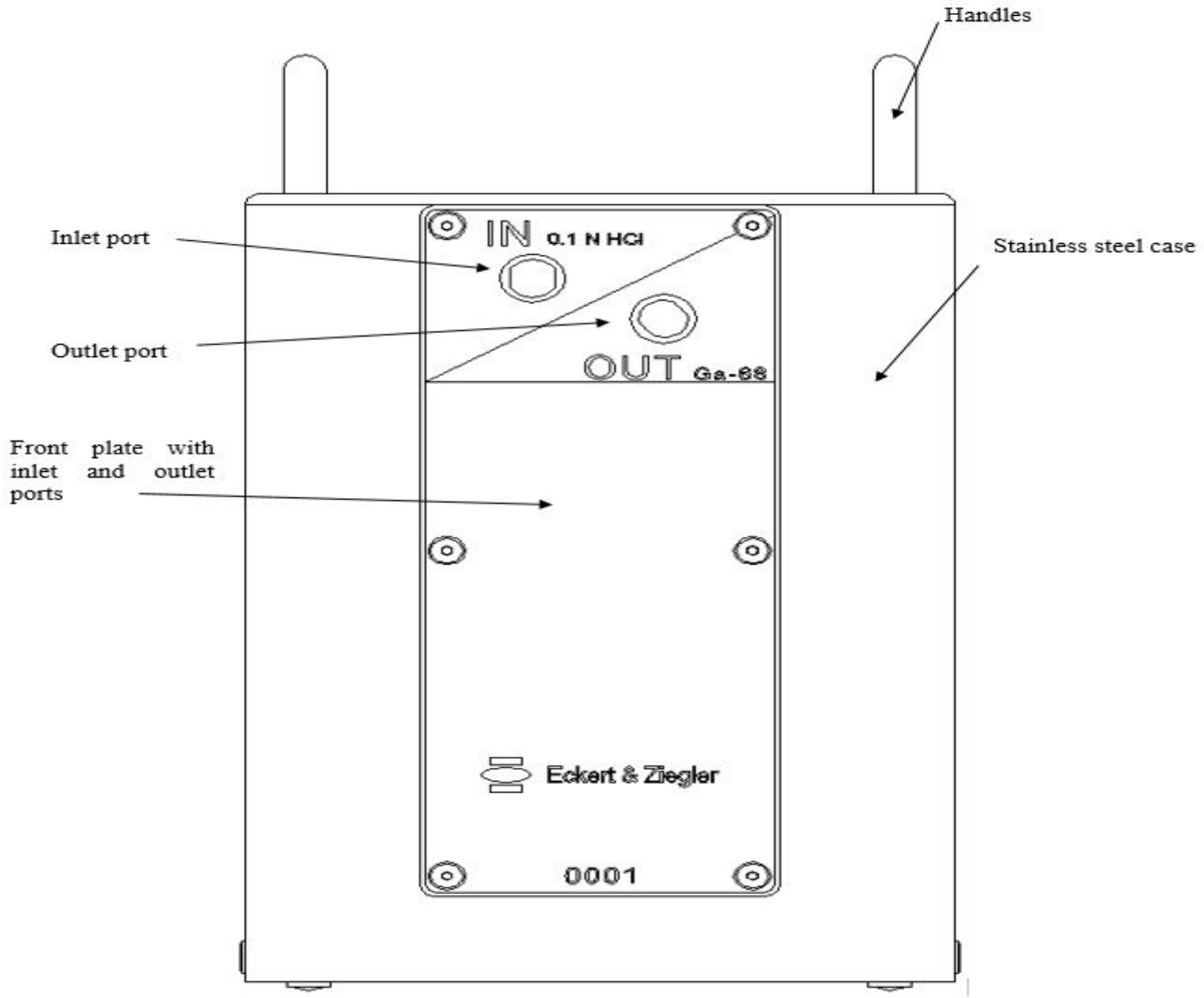

Size: 230 mm x 132 mm x 133 mm (H x W x D)
Weight: approximately 14 kg

6.6 Special precautions for disposal and other handling

General warnings
Radiopharmaceuticals should be received, used and administered only by authorised persons in designated clinical settings. Their receipt, storage, use, transfer and disposal are subject to the regulations and/or appropriate licenses of the competent official organisation.

Radiopharmaceuticals should be prepared in a manner which satisfies both radiation safety and pharmaceutical quality requirements. Appropriate aseptic precautions should be taken.

The generator must not be disassembled for any reason as this may damage the internal components and possibly lead to a leak of radioactive material. Also, disassembly of the casing will expose the lead shielding to the operator.

Administration procedures should be carried out in a way to minimise risk of contamination of the medicinal product and irradiation of the operators. Adequate shielding is mandatory.

The administration of radiopharmaceuticals creates risks for other persons from external radiation or contamination from spill of urine, vomiting, etc. Radiation protection precautions in accordance with national regulations must therefore be taken.

The residual activity of the generator must be estimated before disposal.

Any unused medicinal product or waste material should be disposed of in accordance with local requirements.

7 MARKETING AUTHORISATION HOLDER

Eckert & Ziegler Radiopharma GmbH
Robert-Rössle-Str. 10
Berlin
13125
Germany

8 MARKETING AUTHORISATION NUMBER

PA2192/001/001

9 DATE OF FIRST AUTHORISATION/RENEWAL OF THE AUTHORISATION

Date of first authorisation: 1st September 2017
Date of last renewal: 8th March 2019

10 DATE OF REVISION OF THE TEXT

February 2020

11 DOSIMETRY

The radiation dose received by the various organs following intravenous administration of a ^{68}Ga-labelled medicinal product is dependent on the specific medicinal product being radiolabelled. Information on radiation dosimetry of each different medicinal product following administration of the radiolabelled preparation will be available in the Summary of Product Characteristics of the particular medicinal product.

The dosimetry tables 3 and 4 below are presented in order to evaluate the contribution of non-conjugated ^{68}Ga to the radiation dose following the administration of ^{68}Ga-labelled medicinal product or resulting from an inadvertent intravenous injection of gallium (^{68}Ga) chloride solution.

The dosimetry estimates were based on a rat distribution study and the calculations were effected using OLINDA - Organ Level INternal Dose Assessment Code. Time points for measurements were 5 minutes, 30 minutes, 60 minutes, 120 minutes and 180 minutes.

Table 3: Absorbed dose per unit activity administered - inadvertent administration in women

Absorbed dose per administered unit of activity (mGy/MBq)						
Organ	**Adult (57 kg)**	**15 years (50 kg)**	**10 years (30 kg)**	**5 years (17 kg)**	**1 year (10 kg)**	**Newborn (5 kg)**
Adrenals	0.0114	0.0112	0.0164	0.0238	0.0403	0.0782
Brain	0.0180	0.0159	0.0176	0.0206	0.0292	0.0667
Breasts	0.0059	0.0058	0.0110	0.0163	0.0269	0.0545
Gallbladder Wall	0.0096	0.0092	0.0127	0.0201	0.0390	0.0750
Lower large intestine Wall	0.0032	0.0032	0.0050	0.0077	0.0133	0.0292
Small Intestine	0.0039	0.0039	0.0062	0.0099	0.0178	0.0376
Stomach Wall	0.0057	0.0056	0.0088	0.0133	0.0250	0.0502
Upper large intestine Wall	0.0040	0.0039	0.0067	0.0104	0.0199	0.0425
Heart Wall	0.1740	0.1940	0.3010	0.4830	0.8730	1.7200
Kidneys	0.0385	0.0421	0.0600	0.0888	0.1600	0.4150
Liver	0.0972	0.0974	0.1480	0.2200	0.4270	0.9890
Lungs	0.1860	0.2240	0.3190	0.4930	0.9840	2.7100
Muscle	0.0073	0.0076	0.0131	0.0319	0.0622	0.0954
Ovaries	0.0188	0.0203	0.0566	0.0988	0.2250	0.4590
Pancreas	0.0187	0.0218	0.0406	0.0547	0.1120	0.3400
Red Marrow	0.0225	0.0256	0.0415	0.0777	0.1770	0.5710
Osteogenic Cells	0.1160	0.1140	0.1840	0.3100	0.7350	2.3500

Skin	0.0029	0.0029	0.0044	0.0067	0.0122	0.0271
Spleen	0.0055	0.0056	0.0086	0.0130	0.0238	0.0492
Thymus	0.0100	0.0102	0.0133	0.0190	0.0297	0.0570
Thyroid	0.2210	0.2980	0.4600	1.0200	1.9300	2.6300
Urinary Bladder Wall	0.0023	0.0022	0.0038	0.0063	0.0110	0.0222
Uterus	0.0792	0.0802	1.3400	2.0300	3.6900	1.4700
Total Body	0.0177	0.0178	0.0289	0.0468	0.0920	0.2340
Effective Dose (mSv/MBq)	0.0483	0.0574	0.1230	0.2090	0.4100	0.7170

Table 4: Absorbed dose per unit activity administered – inadvertent administration in men

Absorbed dose per administered unit of activity (mGy/MBq)						
Organ	**Adult (70 kg)**	**15 years (50 kg)**	**10 years (30 kg)**	**5 years (17 kg)**	**1 year (10 kg)**	**Newborn (5 kg)**
Adrenals	0.0093	0.0112	0.0165	0.0235	0.0377	0.0749
Brain	0.0134	0.0137	0.0148	0.0170	0.0241	0.0563
Breasts	0.0062	0.0074	0.0142	0.0213	0.0350	0.0725
Gallbladder Wall	0.0081	0.0096	0.0137	0.0213	0.0409	0.0803
Lower large intestine Wall	0.0015	0.0020	0.0031	0.0051	0.0091	0.0204
Small Intestine	0.0022	0.0029	0.0048	0.0080	0.0146	0.0309
Stomach Wall	0.0048	0.0066	0.0099	0.0153	0.0287	0.0560
Upper large intestine Wall	0.0027	0.0033	0.0058	0.0094	0.0182	0.0385
Heart Wall	0.3030	0.3930	0.6110	0.9830	1.7800	3.4900
Kidneys	0.0198	0.0241	0.0345	0.0510	0.0911	0.2310
Liver	0.0766	0.1030	0.1570	0.2330	0.4500	1.0400
Lungs	0.1340	0.2000	0.2850	0.4390	0.8720	2.3800
Muscle	0.0051	0.0074	0.0129	0.0326	0.0636	0.0961
Pancreas	0.0187	0.0257	0.0480	0.0646	0.1310	0.4030
Red Marrow	0.0138	0.0154	0.0243	0.0441	0.0980	0.3110
Osteogenic Cells	0.0431	0.0558	0.0901	0.1510	0.3560	1.1300
Skin	0.0020	0.0024	0.0036	0.0057	0.0103	0.0232
Spleen	0.0041	0.0056	0.0084	0.0130	0.0227	0.0469
Testes	0.0011	0.0018	0.0075	0.0094	0.0138	0.0239
Thymus	0.0139	0.0158	0.0194	0.0276	0.0417	0.0794
Thyroid	0.1980	0.3250	0.5020	1.1200	2.1100	2.8800
Urinary Bladder Wall	0.0011	0.0013	0.0022	0.0039	0.0070	0.0152
Total Body	0.0115	0.0147	0.0237	0.0383	0.0748	0.1900
Effective Dose (mSv/MBq)	0.0338	0.0506	0.0756	0.1340	0.2600	0.5550

The effective dose resulting from an accidental intravenously injected activity of 250 MBq is 12.1 mSv for a 57 kg female adult and 8.45 mSv for a 70 kg male adult.

Data on the radiation dose to patients of gallium (^{68}Ga) citrate listed in the table 5 below are from ICPR 53 and may be used to estimate distribution after inadvertent application of unbound ^{68}gallium from the generator eluate, even though the data were obtained using a different salt.

Table 5: Absorbed dose per unit activity inadvertent administration of gallium (68Ga) citrate

Absorbed dose per administered unit of activity (mGy/MBq)					
Organ	**Adult**	**15 years**	**10 years**	**5 years**	**1 year**
Adrenals	0.034	0.044	0.064	0.088	0.140
Bone surface	0.037	0.048	0.080	0.140	0.3

					10
Breast	0.014	0.014	0.023	0.037	0.074
Lower large intestine Wall	0.018	0.022	0.036	0.059	0.110
Small Intestine	0.064	0.080	0.140	0.230	0.450
Stomach Wall	0.014	0.017	0.027	0.044	0.084
Upper large intestine Wall	0.053	0.064	0.110	0.180	0.360
Kidneys	0.026	0.032	0.046	0.068	0.120
Liver	0.027	0.035	0.053	0.079	0.150
Lungs	0.013	0.016	0.025	0.041	0.080
Pancreas	0.014	0.018	0.029	0.047	0.089
Red Marrow	0.046	0.064	0.110	0.210	0.450
Spleen	0.036	0.051	0.080	0.130	0.240
Testes	0.013	0.015	0.024	0.039	0.077
Thyroid	0.012	0.015	0.025	0.042	0.081
Urinary Bladder Wall	0.014	0.016	0.026	0.044	0.081
Other tissue	0.013	0.015	0.025	0.041	0.080
Effective Dose (mSv/MBq)	0.027	0.034	0.056	0.095	0.190

External radiation exposure

The average surface or contact radiation for the ($^{68}Ge/^{68}Ga$) radionuclide generator is less than 0.14 µSv/h per MBq of ^{68}Ge. For example, a 1.85 GBq generator will reach a maximum surface dose rate of 260 µSv/h. It is generally recommended that the generator is stored within auxiliary shielding to minimize dose to operating personnel.

12 INSTRUCTIONS FOR PREPARATION OF RADIOPHARMACEUTICALS

The general handling, the attachment of tubing, the exchange of the sterile ultrapure 0.1 mol/l hydrochloric acid container, the elution of the generator and other activities potentially exposing the GalliaPharm to the environmentshould be undertaken using aseptic technique in an appropriately cleanenvironment according to current national legislation. Additionally, all these handling steps must be performed in premises complying with the national regulations concerning the safety of use of radioactive products.

Unpacking of the generator

1. Check outer shipping package for shipping damage. If damaged, perform radiation wipe survey of the damaged area. If counts exceed 40 counts per second per 100 cm^2 notify your Radiation Safety Officer.

2. Cut security seal on top of shipping package. Remove the inner foam support from the shipping package. Separate the foam halves carefully.

3. Carefully remove generator. Perform radiation survey.

CAUTION: Drop hazard: The GalliaPharm generator weighs approximately 14 kg. Handle with care to avoid potential injuries. If generator is dropped or if shipping damage extends into the shipping package, check for leaks and perform a wipe survey of the generator. Also check for internal damage by slowly tilting the generator 90°. Listen for broken/loose parts.

4. Perform wipe survey of shipping package inserts and generator outer surface. If wipes exceed 40 counts per second per 100 cm^2, notify your Radiation Safety Officer.

5. Check sealed inlet and outlet ports for damage. Do not remove the port plugs before the elution lines are prepared and ready for installation.

Optimal positioning:

1. When installing the GalliaPharm radionuclide generator in its final position, i.e. with a synthesis device or for manual elutions, it is recommended to keep the outlet line as short as possible as the length of this tubing may influence the recovered yield in the receiving/reaction vial. For this reason GalliaPharm is supplied with three different length of tubing to choose the appropriate length.

2. Use auxiliary shielding when positioning the GalliaPharm generator.

Preparation:

1. Accessories supplied with the generator:
1. 1 x Container with 250 ml sterile ultrapure 0.1 mol/l hydrochloric acid (PP)
2. 1 x Vented spike (ABS/PE)
3. 2 x Adapter 1/16″ to male LUER (PEEK)
4. 2 x Tubing 60 cm (PEEK)
5. 1 x Tubing 40 cm (PEEK)
6. 1 x Tubing 20 cm (PEEK)
7. 3 x Fingertight fitting 1/16″ 10-32 (PEEK) for outlet port and adapters
8. 1 x Fingertight fitting 1/16″ M6 (PEEK) for inlet port
9. 1 x Stopcock manifold (TPX/HDPE)
10. 1 x Male LUER union (PP)

Wear gloves to assemble the lines and to connect the eluent solution to the generator using aseptic technique in an appropriately cleanenvironment.

2. Inlet port and line: Please note: the inlet port has a customised thread to avoid misconnection. Only the special fingertight fitting 1/16″ M6 will fit into this port. For assembling the inlet line connect the vented spike to one end of the stopcock manifold. On the other end of the stopcock manifold connect the 1/16″ to male LUER adapter. Attach one of the 60 cm long PEEK tubing with 1/16″ 10-32 fingertight fitting. Push the special 1/16″ M6 fingertight fitting on the line, but do not connect yet.

3. Outlet port and line: For assembling the outlet line chose the appropriate length of tubing (20 cm, 40 cm, or 60 cm) for your local setting. Please use the shortest line possible. Attach the chosen PEEK line to the second 1/16″ to LUER adapter using the 1/16″ 10-32 fingertight fitting. Push the third 1/16″ 10-32 fingertight fitting on the prepared outlet line, but do not connect yet.

Picture of assembled elution accessories before connected to the GalliaPharm generator

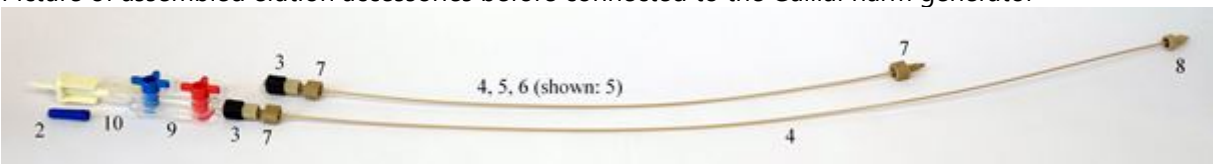

4. Hang the container with the 250 ml sterile ultrapure 0.1 mol/l hydrochloric acid close to the inlet port but above the GalliaPharm generator.

5. Turn the valves at the stopcock manifold in the appropriate direction that no liquid can enter through the spike. Push spike into the container connection; then slowly remove all air from the stopcock valves and the attached inlet line and fill with sterile ultrapure 0.1 mol/l hydrochloric acid. When manifold and line are filled, close valves at the stopcock to stop flow.

6. Remove the plug from the GalliaPharm generator inlet port and connect prepared and filled inlet line with the special 1/16" M6 fingertight fitting. Avoid hard bending or pinching of the line.

7. Remove plug from outlet port of the GalliaPharm generator and connect prepared outlet line with the 1/16" 10-32 fingertight fitting. Avoid hard bending or pinching of the line.

8. The GalliaPharm generator is now ready for the first elution.

9. The generator is designed not to drain itself, when no lines are connected to the inlet and outlet ports, but it is not recommended to leave the ports open. When the container with the sterile ultrapure 0.1 mol/l hydrochloric acid is connected and the fluid path is open, then the GalliaPharm generator will be eluted by gravity, therefore it is necessary to take care about the inlet and outlet lines and also about the positions of the stopcock valves.

Picture of assembled GalliaPharm generator ready for elution:

First elution:

1. When installing the GalliaPharm radionuclide generator in its final position, i.e. with a synthesis device or for manual elutions, it is recommended to keep the outlet line as short as possible as the length of this tubing may influence the recovered yield in the receiving/reaction vial.

2. Aseptic working technique must be maintained during the assembly process, especially when handling the ports. This is critical for the maintenance of sterility.

3. Prepare additional necessary materials:
- Personal protective equipment: elutions should be performed while wearing eye and hand protection and also appropriate laboratory cloth.
- Sterile syringe with 10 ml volume.
- Shielded receiving vial or vessel with 10 ml or larger volume. Avoid uncoated chlorobutyl stoppers as they may contain considerable amounts of zinc that is extracted by the acidic eluate.

4. Attach the syringe to the upper side port of the stopcock manifold and fill with 10 ml of sterile ultrapure 0.1 mol/l hydrochloric acid from the container, but avoid any air inside the syringe.

5. Connect the vial or other receiving vessel to the outlet line using the appropriate connector. The vessel must have sufficient capacity to accept the eluate volume.

6. Turn valve of stopcock manifold where the syringe is connected towards the inlet port of the generator. Push the 10 ml sterile ultrapure 0.1 mol/l hydrochloric acid at a rate not greater than 2 ml/minute. Eluting at a faster rate may reduce the life of the generator.5 ml of eluent will fully elute the generator, but for the first elution it is recommended to use 10 ml. If high resistance is encountered, do not force solution into generator. If a peristaltic pump is used for elution it should be set to a volume rate of not more than 2 ml/minute. The user should also verify that eluent is flowing without unusual resistance. If high resistance is noticed, discontinue elution.

CAUTION:
- Be sure to introduce eluent through the inlet port; do not elute the GalliaPharm generator in reverse direction.
- Elution efficiency (^{68}Ga yield) may be reduced if air is introduced into the generator column.

7. Collect eluate in shielded receiving vessel and measure solution with a calibrated dose calibrator to determine the yield. If less than 5 ml of eluate have been collected, measurement may not represent the total potential yield of generator. Please decay correct the measured activity to the starting time of the elution. For optimal yield of the generator in its final position it is recommended to determine the elution peak by collecting small fractions of 0.5 ml.

8. It is recommended to discard the first eluate due to the potential ^{68}Ge breakthrough in this eluate.

9. It is recommended to test the eluate for ^{68}Ge breakthrough after the first elutions by comparing the activity level of the ^{68}Ga and the ^{68}Ge. For further details please refer to Ph. Eur. monograph 2464.

Continuous routine elution:

1. Repeat the steps of the first elution but use only 5 ml for the continuous routine elution. The GalliaPharm generator is designed to elute all of the available ^{68}Ga activity in a volume of 5 ml.

2. Elute the GalliaPharm radionuclide generator at every working day with 5 ml sterile ultrapure 0.1 mol/l hydrochloric acid.

3. The solution eluted is a clear, sterile and colourless gallium (^{68}Ga) chloride solution, with a pH between 0.5 and 2.0 and a radiochemical purity greater than 95 %. Check the clarity of the eluate before use and discard it if the solution is not clear.

4. If the generator has not been used for a period of 3 days or more, free ^{68}Ge ions accumulate within the column over time. Therefore it is recommended that the column is eluted once at least 7 - 24 hours prior to eluting for labelling. This elution should be done using 10 ml of sterile ultrapure 0.1 mol/l hydrochloric acid to fully wash the impurities from the column.

5. It is recommended to test the eluate for ^{68}Ge breakthrough during routine elutions by comparing the activity level of the ^{68}Ga and the ^{68}Ge. For further details please refer to Ph. Eur. monograph 2464.

CAUTION:
If fluid leaks are observed at any time, immediately stop eluting and attempt to contain the leaking fluid.

The ^{68}Ge/^{68}Ga-generator is supplied with 250 ml of sterile ultrapure 0.1 mol/l hydrochloric acid. This amount is usually sufficient for at least 40 elutions. The ^{68}Ge/^{68}Ga-generator should only be eluted with sterile ultrapure 0.1 mol/l hydrochloric acid supplied by the marketing authorization holder. Additional containers may be purchased as consumables from the marketing authorisation holder.

Exchange of sterile ultrapure 0.1 mol/l hydrochloric acid container:

CAUTION:
Aseptic technique is critical for maintenance of sterility and must be used during the exchange procedure.

1. When the sterile ultrapure 0.1 mol/l hydrochloric acid is almost consumed, it can be replaced by a new sterile ultrapure 0.1 mol/l hydrochloric acid container.

CAUTION: No air should enter the $^{68}Ge/^{68}Ga$-generator. Before disconnecting the empty container, close all valves at the stopcock manifold that no air can enter into the manifold and spike. Disconnect the container from the spike. It is recommended to use a new sterile spike for each sterile ultrapure 0.1 mol/l hydrochloric acid container.

2. Hang the new container with the 250 ml sterile ultrapure 0.1 mol/l hydrochloric acid close to the inlet port but above the GalliaPharm generator.

3. Push the spike into the container stopper; carefully check for air bubbles and slowly remove all air from the stopcock manifold using the valves. It is not necessary to detach the attached inlet line from the GalliaPharm generator or from the stopcock manifold. Entering of air into the $^{68}Ge/^{68}Ga$-generator should be avoided.

4. When manifold and line are filled, close valves to stop flow. The generator is now ready for further use.

GalliaPharm elution yield:

The activity stated on the label of the GalliaPharm generator is expressed in ^{68}Ge available at the calibration date (12:00 CET). The available ^{68}Ga activity depends on the ^{68}Ge activity at the time of elution and the elapsed time since the previous elution.

A GalliaPharm generator in full equilibrium yields more than 60 % of ^{68}Ga using an elution volume of 5 ml sterile ultrapure 0.1 mol/l hydrochloric acid.

The output will decrease with decay of the ^{68}Geparent over time. For example, after 9 months' decay (39 weeks), the ^{68}Ge will be reduced by 50 % (see table 6).

Table 6: Decay Chart for ^{68}Ge

Elapsed Time in weeks	Decay Factor	Elapsed Time in weeks	Decay Factor
1	0.98	27	0.62
2	0.96	28	0.61
3	0.95	29	0.59
4	0.93	30	0.58
5	0.91	31	0.57
6	0.90	32	0.56
7	0.88	33	0.55
8	0.87	34	0.54
9	0.85	35	0.53
10	0.84	36	0.52
11	0.82	37	0.52
12	0.81	38	0.51
13	0.79	39	0.50
14	0.78	40	0.49
15	0.76	41	0.48
16	0.75	42	0.47
17	0.74	43	0.46
18	0.72	44	0.45
19	0.71	45	0.45
20	0.70	46	0.44
21	0.69	47	0.43
22	0.67	48	0.42
23	0.66	49	0.42
24	0.65	50	0.41

25	0.64	51	0.40
26	0.63	52	0.39

After an elution of the GalliaPharm generator the ^{68}Ga will be built up by the continuous decay of the parent ^{68}Ge. The generator requires at least 7 hours to achieve almost full yield after being eluted, but in practice it is also possible to elute the generator after 4 hours.

Table 7 shows the build-up factor of activity of ^{68}Ga which can be eluted after times varying from 0 to 410 minutes since the previous elution:

Table 7: Build-up factors of ^{68}Ga

Elapsed Time in minutes	Build-Up Factor	Elapsed Time in minutes	Build-Up Factor
0	0.00	210	0.88
10	0.10	220	0.89
20	0.19	230	0.91
30	0.26	240	0.91
40	0.34	250	0.92
50	0.40	260	0.93
60	0.46	270	0.94
70	0.51	280	0.94
80	0.56	290	0.95
90	0.60	300	0.95
100	0.64	310	0.96
110	0.68	320	0.96
120	0.71	330	0.97
130	0.74	340	0.97
140	0.76	350	0.97
150	0.78	360	0.97
160	0.81	370	0.98
170	0.82	380	0.98
180	0.84	390	0.98
190	0.86	400	0.98
200	0.87	410	0.98

Examples
A 1.85 GBq generator is 12 weeks old. According to table 6, the activity of ^{68}Ge on the column can be calculated as follows:

1.85 GBq x 0.81 = 1.499 GBq

In full equilibrium the activity of ^{68}Ga on the column is also 1.499 GBq.

The generator is eluted and the collected ^{68}Ga activity is 1.049 GBq which corresponds to a typical yield of 70 %.

The same generator is eluted 4 hours later. The 7 hours needed to reach the ^{68}Ge / ^{68}Ga-equilibrium have not elapsed and the ^{68}Gaactivity built up on the column can be calculated according to table 7 as follows:

1.499 GBq x 0.91 = 1.364 GBq

With a typical yield of 70 % ^{68}Ga, the collected activity would be:

1.364 GBq x 0.70 = 955 MBq

Note:

The activity of ^{68}Ga in the eluate can be measured to check the quality with regard to identity and content. The activity should be measured immediately after elution, but may also be measured up to 5 half-life periods after elution.

Due to the short half-time of ^{68}Ga which is 67.71 minutes, the elapsed time between the elution and the measurement of the activity has to be decay corrected to determine the actual yield at the elution time with the decay chart of ^{68}Ga, table 8.

Example
A new 1.85 GBq generator is eluted. The activity of ^{68}Ga measured 10 minutes after the elution was 1.169 GBq.

The yield at the time of the elution can be obtained by dividing the measured activity by the corresponding factor of the elapsed time stated in table 8:
1.169 GBq / 0.903 = 1.295 GBq

This corresponds to a yield of ^{68}Ga of 70 % at the time of the elution:
1.295 GBq / 1.85 GBq x 100 % = 70 %

Table 8: Decay chart of ^{68}Ga

Elapsed Time in minutes	Decay Factor	Elapsed Time in minutes	Decay Factor
1	0.990	35	0.700
2	0.980	36	0.693
3	0.970	37	0.686
4	0.960	38	0.679
5	0.950	39	0.672
6	0.941	40	0.665
7	0.931	41	0.658
8	0.922	42	0.652
9	0.912	43	0.645
10	0.903	44	0.639
11	0.894	45	0.632
12	0.885	46	0.626
13	0.876	47	0.619
14	0.867	48	0.613
15	0.868	49	0.607
16	0.850	50	0.601
17	0.841	51	0.595
18	0.832	52	0.589
19	0.824	53	0.583
20	0.816	54	0.577
21	0.807	55	0.571
22	0.799	56	0.565
23	0.791	57	0.559
24	0.783	58	0.554
25	0.775	59	0.548
26	0.767	60	0.543
27	0.759	61	0.537
28	0.752	62	0.532
29	0.744	63	0.526
30	0.737	64	0.521
31	0.729	65	0.516
32	0.722	66	0.510
33	0.714	67	0.505
34	0.707	68	0.500

Clarity of the solution, pH and the radioactivity must be checked before radiolabelling.

^{68}Ge breakthrough

A small amount of ^{68}Ge is washed from the column with each elution. ^{68}Ge breakthrough is expressed as a percentage of total ^{68}Ga eluted from the column, corrected for decay. The ^{68}Ge breakthrough is not more than 0.001 % of the eluted ^{68}Ga activity. The breakthrough for this generator typically begins as low as 0.0001 % at the point of release and may rise slightly with the number of elutions. To keep the breakthrough low, the generator should be eluted at least once per working day. When used according to these instructions, the breakthrough should stay below 0.001 % for 12 months. For testing the ^{68}Ge breakthrough the activity level of the ^{68}Ga and the ^{68}Ge in the eluate should be compared. For further details please refer to Ph. Eur. monograph 2464.

Warning: Breakthrough of ^{68}Ge can increase above 0.001 % if the generator is not eluted for more than 2 days. If the generator has not been used for 3 days or more, it should be pre-eluted with 10 ml of sterile ultrapure 0.1 mol/l hydrochloric acid 7 - 24 hours prior to the intended use.

Any unused medicinal product or waste material should be disposed of in accordance with local requirements.